Assembly and Operating Instructions

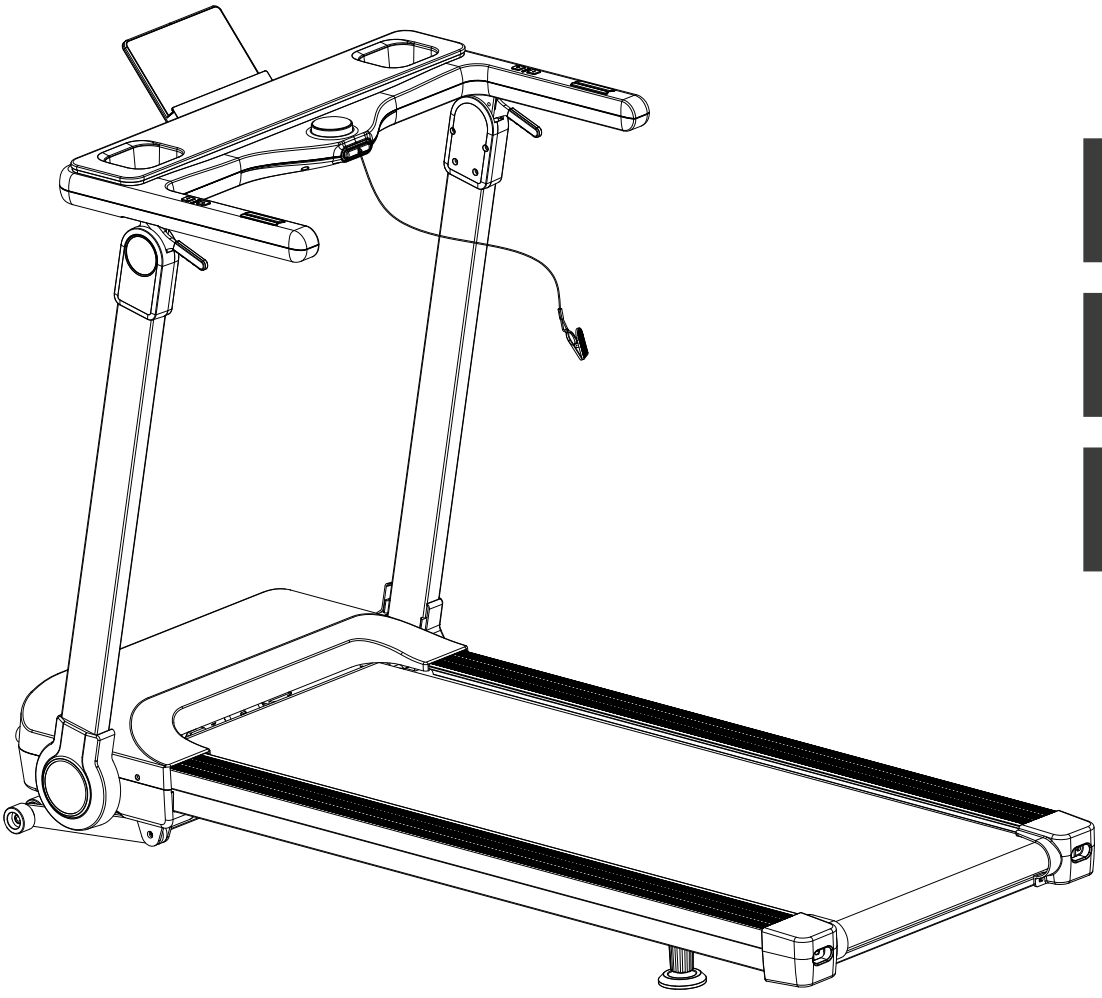

max. 120 kg

~ 15 Min.

57 kg

L 158 | W 77 | H 117

FSDFTM30.02.08

Art.-No. DF-TM30-2

Content

1 GENERAL INFORMATION 8

1.1 Technical Data 8
1.2 Personal Safety 9
1.3 Electrical Safety 10
1.4 Set-Up Place 11

2 ASSEMBLY 12

2.1 General Instructions 12
2.2 Scope of Delivery 13
2.3 Assembly 14
2.4 Folding Mechanism 21

3 OPERATING INSTRUCTIONS 22

3.1 Console Display 23
3.2 Button Functions 23
3.3 Fitness Programmes 24
3.3.1 Quickt Start 24
3.3.2 Preset Programme Mode 24
3.3.3 Programme Overview 25
3.3.4 User Programme Mode 26
3.3.5 Body Fat Test 26
3.3.6 Heart Rate Controlled Programmes 27
3.4 Wireless Connection and Fitness Apps 29

4 WORKOUT TIPS 30

4.1 General Instructions 30
4.1.1 Training clothes 30
4.1.2 Warming up and stretching 30
4.1.3 Medication 31
4.1.4 Used muscle groups 31
4.1.5 Exercise frequency 31
4.2 Workout journal 33

5 STORAGE AND TRANSPORT 34

5.1 General Instructions 34
5.2 Transportation Wheels 34

6 TROUBLESHOOTING, CARE AND MAINTENANCE 35
6.1 General Instructions 35
6.2 Faults and Fault Diagnosis 35
6.3 Error Codes and Troubleshooting 36
6.4 Care and Maintenance 37
6.4.1 Adjusting the Running Mat 37
6.4.2 Re-tensioning the Running Mat 38
6.4.3 Lubricating the Running Mat 38
6.5 Maintenance and Inspection Calendar 39
7 DISPOSAL 39
8 RECOMMENDED ACCESSORIES 40
9 ORDERING SPARE PARTS 41
9.1 Serial Number and Model Name 41
9.2 Parts List 42
9.3 Exploded Drawing 47
10 WARRANTY 49
11 CONTACT 51

Dear customer,
thank you for choosing Darwin fitness equipment. With Darwin fitness equipment we offer first class home sports equipment at a great price point. Darwin exercise bikes and strength machines are easy to use, have a space-saving design and look really good. With our equipment we want to support you in reaching your athletic goals, no matter if you want to lose weight or train for the national triathlon. If you have any further questions, please contact us, we are looking forward to hearing from you and wish you lots of fun during your training!

Further information can be found at www.fitshop.com.

Intended Use

The equipment may only be used for its intended purpose.

The equipment is only suitable for home use. The equipment is not suitable for semi-professional (e.g. hospitals, associations, hotels, schools, etc.) and commercial or professional use (e.g. fitness studios).

Legal Notice

Fitshop GmbH
Europe's No. 1 for home fitness

International Headquarters
Flensburger Straße 55
24837 Schleswig
Germany

Management:
Christian Grau
Sebastian Campmann
Dr. Bernhard Schenkel

No. HRB 1000 SL
Local Court Flensburg
European VAT Number: DE813211547

Disclaimer

© Darwin is a registered brand of the company Fitshop GmbH. All rights reserved. Any use of this trademark without the explicit written permission of Fitshop is prohibited.

Product and manual are subject to change. Technical data can be changed without advance notice.

FITSHOP

Europe's No.1 for Home Fitness

ABOUT THIS MANUAL

Please carefully read the entire manual before installation and first use. The manual will help you to quickly set up the system and explains how to safely use it. Make sure that all persons exercising with the equipment (especially children and persons with physical, sensory, mental or motor disabilities) are informed about this manual and its contents in advance. In case of doubt, responsible persons must supervise the use of the equipment.

Due to ongoing changes and software optimisations, the manual may have to be updated. If you notice any discrepancies during assembly or use, please refer to the manual uploaded to the webshop. The latest manual is always available there.

This equipment has been manufactured according to the latest safety knowledge. As far as possible, potential safety hazards which could cause injury have been eliminated. Make sure to carefully follow the instructions and that all parts are securely in place. If required, read through the instructions again to correct any mistakes.

Training devices must be classified according to accuracy and use. Accuracy classes are only applicable to devices that display training data.

Accuracy classes

Class A: high accuracy.
Class B: medium accuracy.
Class C: low accuracy.

The use classes explain the intended use of the training device.

Use classes

Class S (studio): professional and/or commercial use.
These training devices are intended for the use in training rooms of facilities such as sports clubs, school facilities, hotels, clubs and studios whose access and supervision is specifically regulated by the owner (person with legal responsibility).

Class H (home use): use at home.
These stationary training devices are intended for the use in private homes where access to the training device is regulated by the owner (person with legal responsibility).

Please pay close attention to the safety and maintenance instructions given here. The contract partner cannot be held liable for damage to health, accidents or damage to the equipment when it is not used in accordance with these instructions.

The following safety instructions may appear in this manual:

► **ATTENTION**
This notice indicates potentially hazardous situations which, if not avoided, may result in property damage.

⚠ **CAUTION**
This notice indicates potentially hazardous situations which, if not avoided, may result in slight or minor injuries!

⚠ **WARNING**
This notice indicates potentially hazardous situations which, if not avoided, may result in death or serious injuries!

⚠ **DANGER**
This notice indicates potentially hazardous situations which, if not avoided, will result in death or serious injuries!

ⓘ **NOTICE**
This notice indicates further useful information.

Retain these instructions in a safe place for future reference, maintenance or when ordering replacement parts.

1.1 Technical Data

LED Display:

- Time in minutes
- Distance in km
- Speed in km/h
- Calorie consumption in kcal
- Heart rate (when using hand pulse sensors or chest strap)
- Incline

Motortype:	Brushless motor
Speed:	1 - 16 km/h in steps of 0.1km/h
Incline:	15 levels
Training programmess in total:	20
Quick keys speed:	3
Quick keys incline:	3
Thickness of running mat:	1.6 mm
Size of running surface (L x W):	130 cm x 48 cm

Weight and dimensions:

Article weight (gross, including packaging):	65.5 kg
Article weight (net, without packaging):	56.5 kg
Packaging dimensions (L x W x H):	166 cm x 84.5 cm 24.5 cm
Set-up dimensions (L x W x H):	157.6 cm x 77.3 cm x 116.5 cm
Folding dimensions (L x W x H):	157.6 cm x 77.3 cm x 21.8 cm
Maximum user weight:	120 kg
Use class:	H

1.2 Personal Safety

⚠ DANGER

+ Before you start using the equipment, you should consult your physician that this type of exercise is suitable for you from a health perspective. Particularly affected are persons who: have a hereditary disposition to high blood pressure or heart disease, are over the age of 45, smoke, have high cholesterol values, are overweight and/or have not exercised regularly in the past year. If you are under medical treatment that affects your heart rate, medical advice is absolutely essential.
+ Note that excessive training can seriously endanger your health. Please also note that heart rate monitoring systems can be inaccurate. If you notice any signs of weakness, nausea, dizziness, pain, shortness of breath, or other abnormal symptoms, stop exercising immediately and seek advice from your doctor if necessary.
+ The owner must communicate all warnings and instructions to the user.

⚠ WARNING

+ This equipment may not be used by children under the age of 14.
+ Children should not be allowed unsupervised access to the equipment.
+ Persons with disabilities must have a medical license and must be under strict observation when using the equipment.
+ The equipment is strictly for use by one person at a time.
+ If your equipment provides a safety key, the clip of the safety key must be attached to your clothing before starting your training. In the event of a fall, the EMERGENCY STOP of the equipment can be initiated.
+ If an emergency occurs and training has to be stopped abruptly, pull out the safety key, grab both handles, jump onto the side rails and wait until the treadmill has come to a complete stop.
+ Keep your hands, feet and other body parts, hair, clothing, jewellery and other objects well clear of moving parts.
+ During use, wear suitable sports clothing rather than loose or baggy clothing. When wearing sports shoes, make sure they have suitable soles, preferably made of rubber or other non-slip materials. Shoes with heels, leather soles, studs or spikes are unsuitable. Never exercise barefoot.

⚠ CAUTION

+ If your equipment needs to be connected to the power supply with a mains cable, make sure that the cable is not a potential tripping hazard.
+ Make sure that nobody is within the range of motion of the equipment during training so as not to endanger you or other persons.
+ Be aware that if adjustment devices are left protruding, they may impede the user's movement.

► **ATTENTION**

+ Do not insert any objects of any kind into the openings of the device.
+ The safety level of the appliance can only be maintained if it is regularly checked for damage and wear.
+ To protect the equipment from use by unauthorised third parties, always remove the power cable when not in use and store it in a safe place that is inaccessible to unauthorised persons (e.g. children).

1.3 Electrical Safety

⚠ **DANGER**

+ In order to reduce the risk of an electric shock, always unplug the equipment from the mains socket immediately after your workout, before assembly or dismantling, and before maintenance or cleaning. Do not pull on the cable.

⚠ **WARNING**

+ Do not leave the equipment unattended while the mains cable is plugged into the mains socket. During your absence, the mains cable must be removed from the mains socket to prevent improper use by third parties or children.
+ If the mains cable or plug is damaged or defective, contact your contract partner. Until repair, the equipment must not be used.

► **ATTENTION**

+ The equipment requires a mains connection of 220-230 V with 50 Hz mains voltage.
+ The equipment may only be connected directly to an earthed socket using the supplied mains cable. Extension cables must conform to VDE guidelines. Always completely unwind the mains cable.
+ The socket must be protected by a fuse with a minimum fuse rating of "16 A, slow blow".
+ Do not make any changes to the mains cable or the mains plug.
+ Keep the mains cable away from water, heat, oil and sharp edges. Do not route the mains cable underneath the equipment or under a carpet or rug, and do not place any objects on top of it.
+ If your purchased item is equipped with a TFT console, software updates must be carried out regularly. Follow the instructions on the console to perform the update(s).
+ The software systems on gym equipment with TFT consoles are set up only for the pre-installed apps. Do not install any additional apps.

ⓘ **NOTICE**

+ The pre-installed apps on TFT consoles are produced and provided by external manufacturers. Fitshop does not take any responsibility for the availability, functionality or contents of these apps.
+ Hereby, Fitshop GmbH declares that the radio equipment type Wireless Connection (2.402 – 2.480 GHz) complies with Directive 2014/53/EU. The full text of the EU Declaration of Conformity is available at the following website: www.fitshop.com.

1.4 Set-Up Place

⚠ WARNING

+ Do not place the equipment in main corridors or escape routes.

⚠ CAUTION

+ Make sure that there is a safety area behind the treadmill with a length of at least 2 m and a width at least equal to the width of the treadmill.
+ The training room should be well ventilated during training and not be exposed to any draughts.
+ Choose the place in which to set up the equipment such that there is enough free space/ clearance to the front, the rear and to the sides of the equipment.
+ The free area in the direction from which the exercise equipment is accessed must be at least 0.6 m larger than the exercise area.
+ The set-up and mounting surface of the equipment should be flat, loadable and solid.

► ATTENTION

+ The device may only be used in one building, in sufficiently tempered and dry rooms (ambient temperatures between 10°C and 35°C). The equipment should not be used outdoors or in rooms with high humidity (over 70%) like swimming pools.
+ A floor protective mat/equipment underlay can help to protect high-quality floor coverings (parquet, laminate, cork, carpets) from dents and sweat and can help to level out slight unevenness.
+ For Class S equipment, the exercise equipment may only be used in areas where access, supervision and control are specifically regulated by the owner.

Recommended free zone:

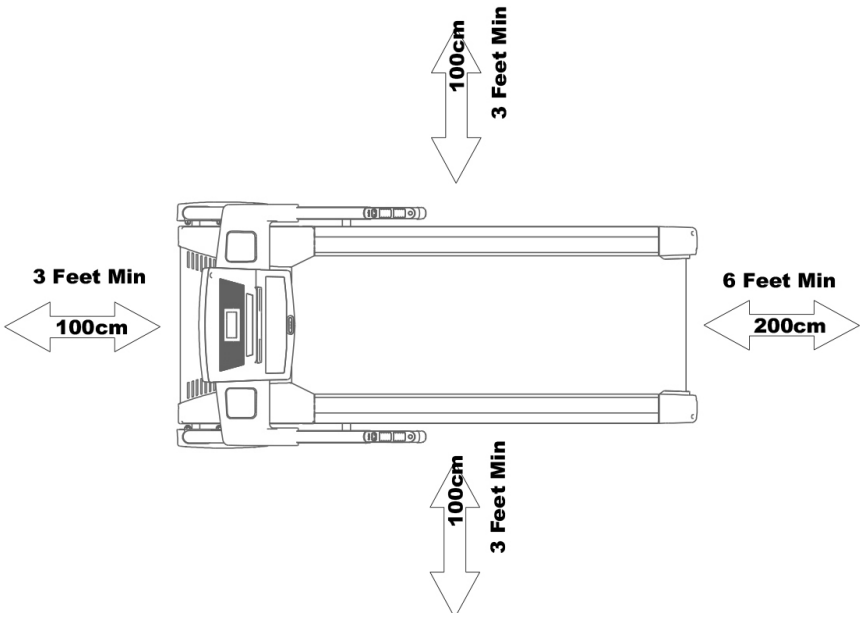

2.1 General Instructions

DANGER

+ Do not leave any tools, packaging materials such as foils or small parts lying around, as otherwise there is a danger of suffocation for children. Keep children away from the equipment during assembly.

WARNING

+ Pay attention to the instructions attached to the equipment in order to reduce the risk of injuries.

CAUTION

+ Ensure to have sufficient room for movement in each direction during assembly.
+ The assembly of the equipment must be carried out by at least two adults. If in doubt, seek the help of a third technically skilled person.

ATTENTION

+ To prevent damage to the equipment and the floor, assemble the equipment on a mat or packaging board.

NOTICE

+ In order to make the assembly as simple as possible, some screws and nuts to be used can already be pre-assembled.
+ Ideally, assemble the equipment at its later set-up place.

2.2 Scope of Delivery

The scope of delivery consist of the following parts. At the beginning, check whether all parts and tools belonging to the device are included in the scope of delivery and whether damage has occurred. In the event of complaints, the contractual partner must be contacted directly.

⚠ **CAUTION**
If parts of the scope of delivery are missing or damaged, the assembly must not be carried out.

Tools required (included in the scope of delivery): Allen key, spanner

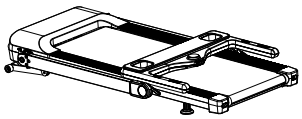 A	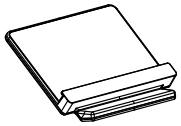 B	B12	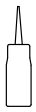 C
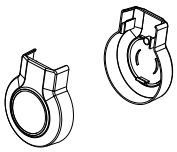 C10	C16	E16	

2.3 Assembly

Before assembly, take a close look at the individual assembly steps shown and carry out the assembly in the order given.

NOTICE

+ First loosely screw all parts together and check that they fit properly. Tighten the screws using the tool only when you are instructed to do so.
+ If you have difficulty recognising the graphics, we recommend that you open and/or download the PDF instructions stored in the webshop on your end device (e.g. smartphone, tablet or PC). There you have the option of zooming in closer. Please note that the Adobe Acrobat Reader programme must be installed on your end device in order to open the file.

Step 1: Unpacking the treadmill

Remove the device from the box.

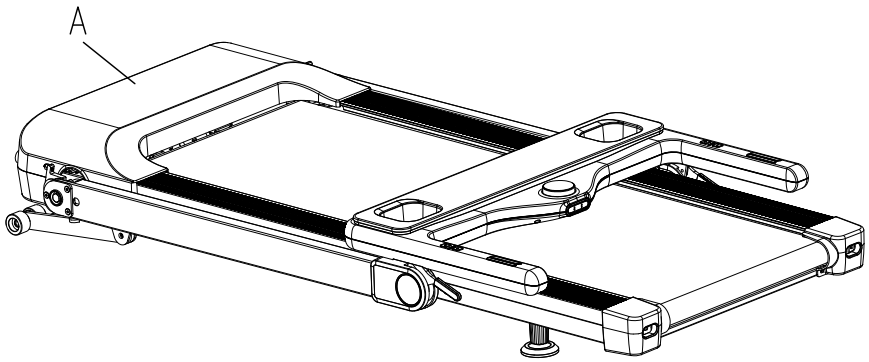

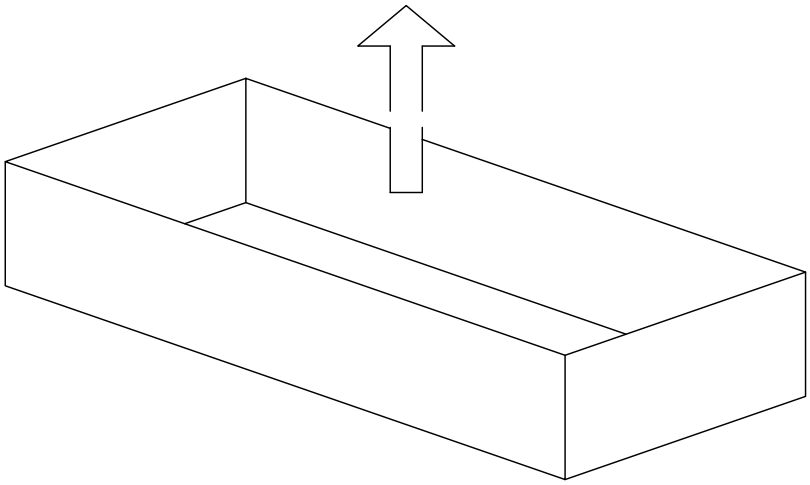

Step 2: Setting the Upright Tubes

Lift the console unit (A05) along with left and right upright tubes (A03 & A04) upwards.

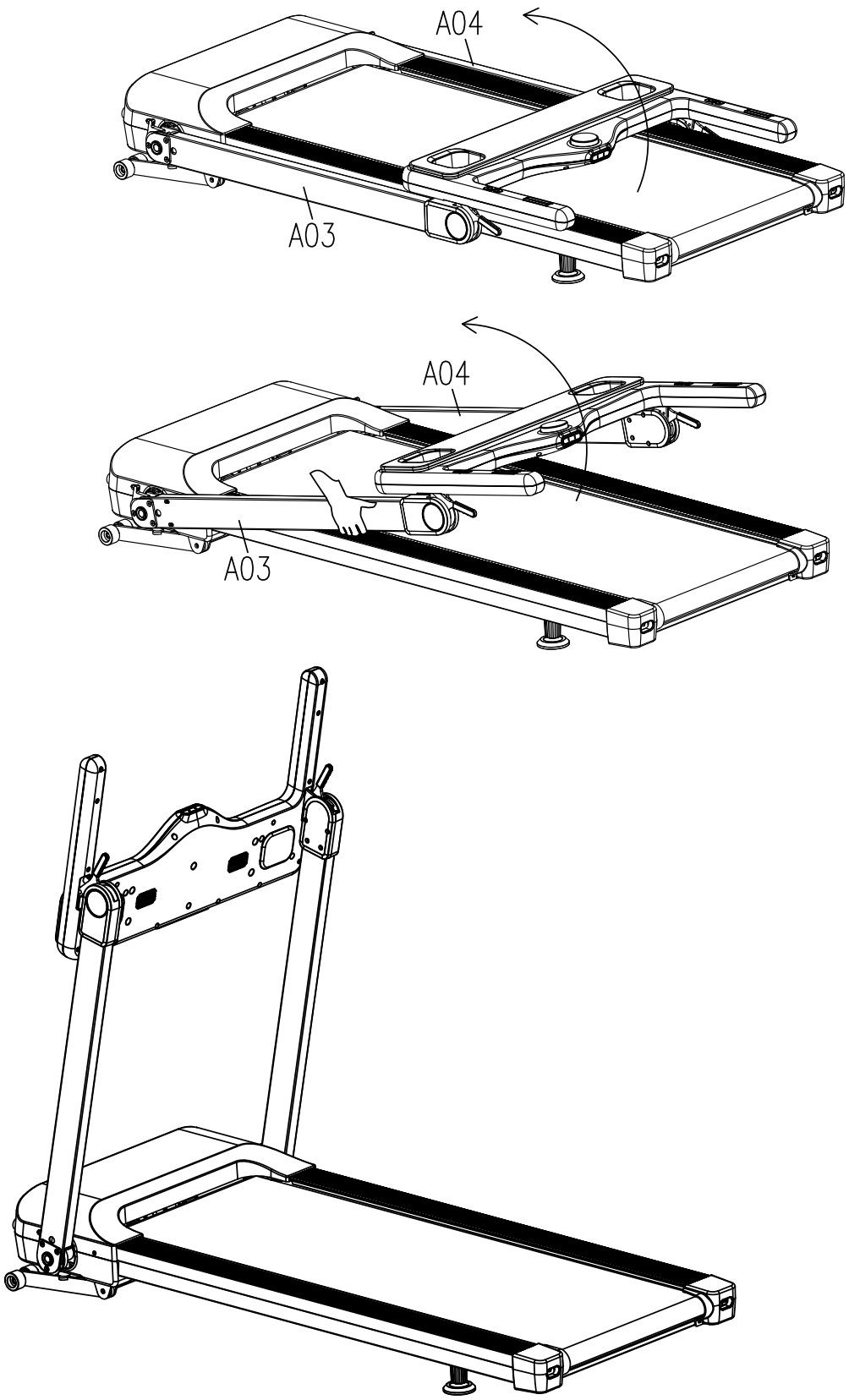

Step 3: Setting the Console Unit

Fold the console unit (A05) forwards.

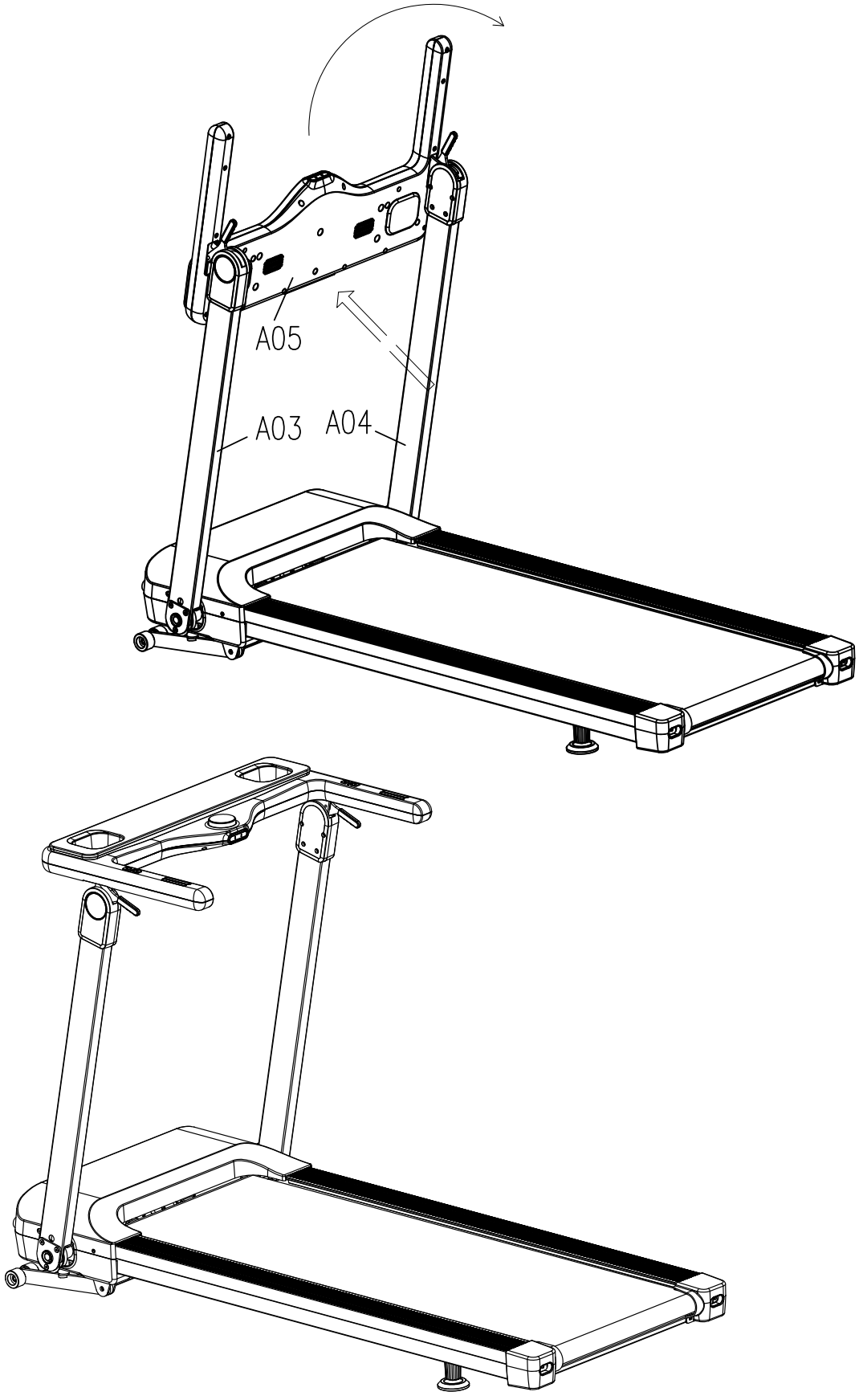

Step 4: Assembly of the Covers

Place the two covers (C10) on the left and right upright tubes (A03 & A04).

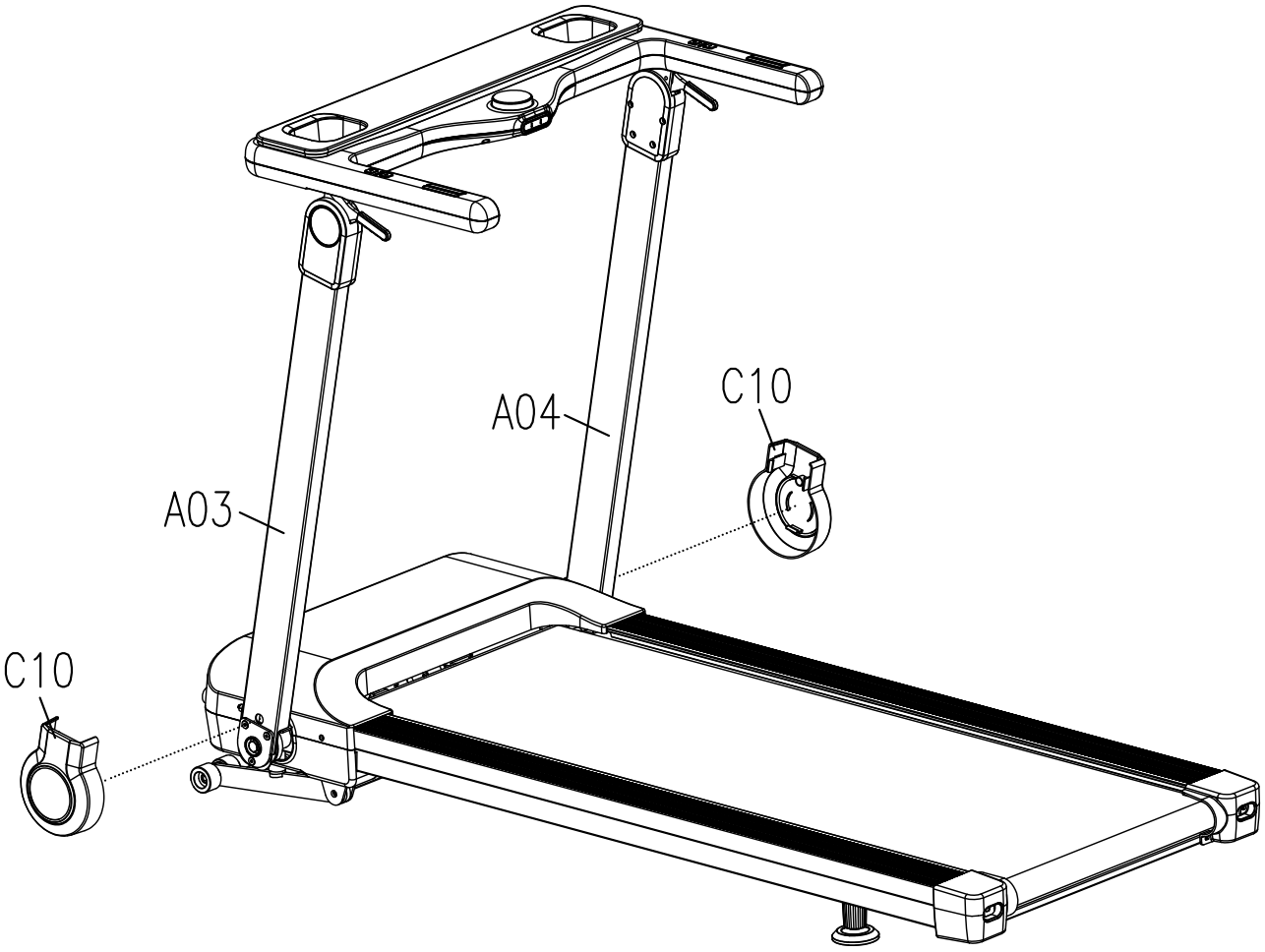

Step 5: Assembly of the Tablet Holder

Insert the tablet holder (B) into the socket provided on the console unit (A05).

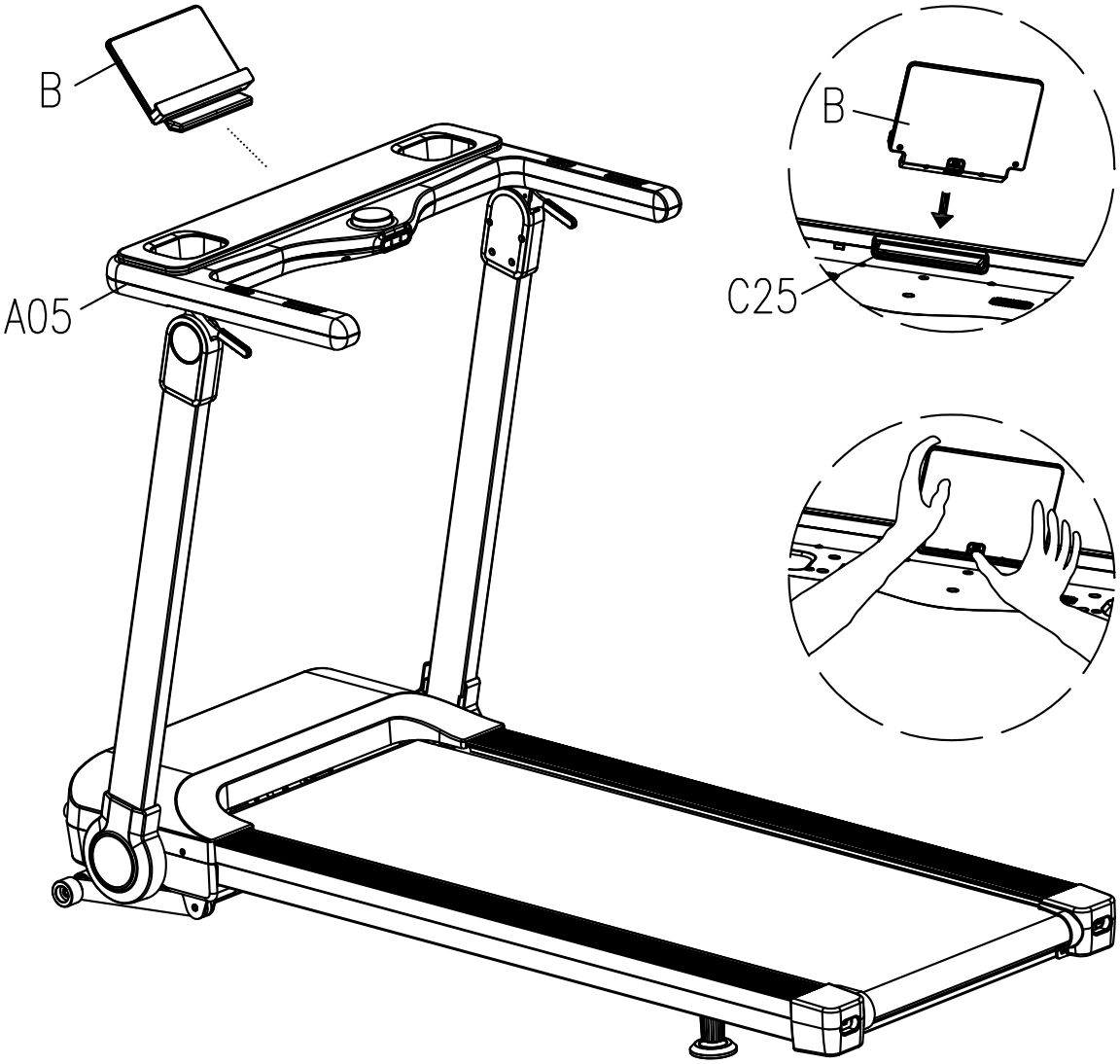

Step 6: Attachment of the Safety Key

Insert the safety key (C16) into the socket of the console unit (C33).

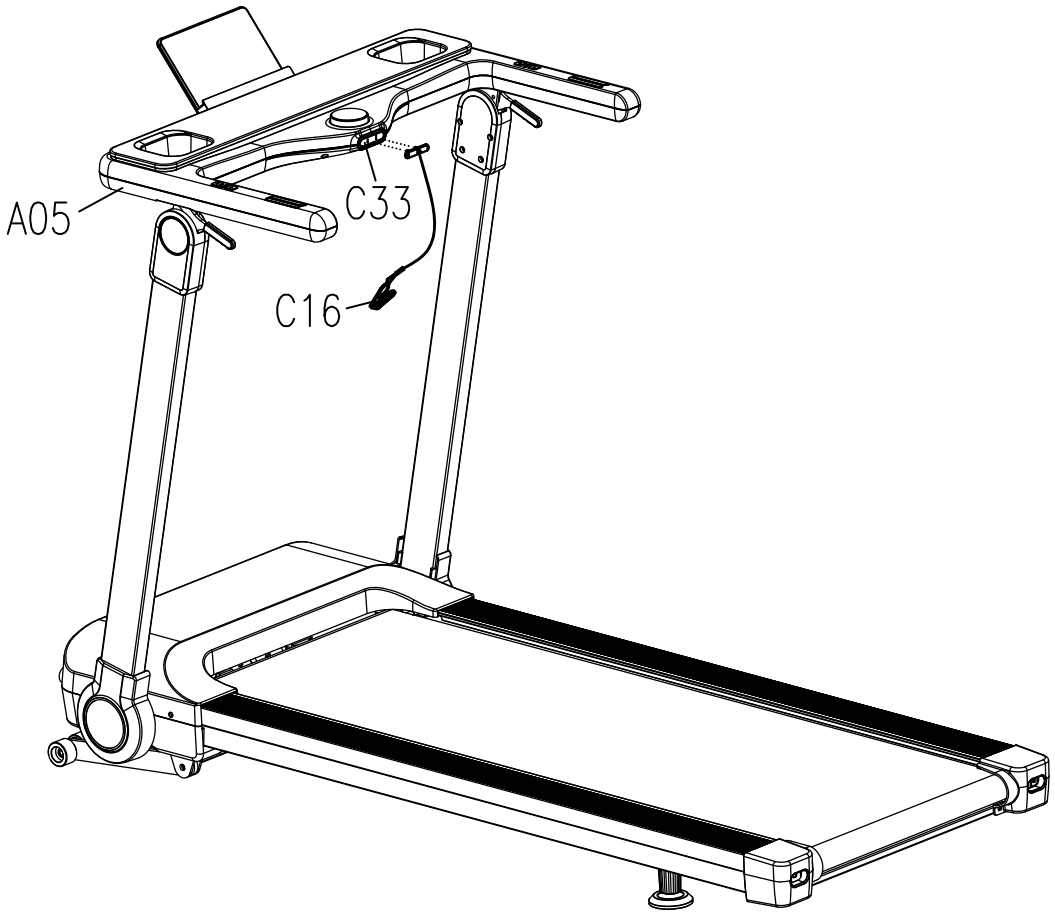

Step 7: Alignment of the feet

If the floor is uneven, you can stabilize the treadmill by turning the two setting screws under the main frame.

1. Lift the treadmill on the desired side and rotate the setting screws under the main frame.
2. Rotate the screws clockwise in order to remove them and to raise the running surface.
3. Rotate them counterclockwise in order to lower the running surface.

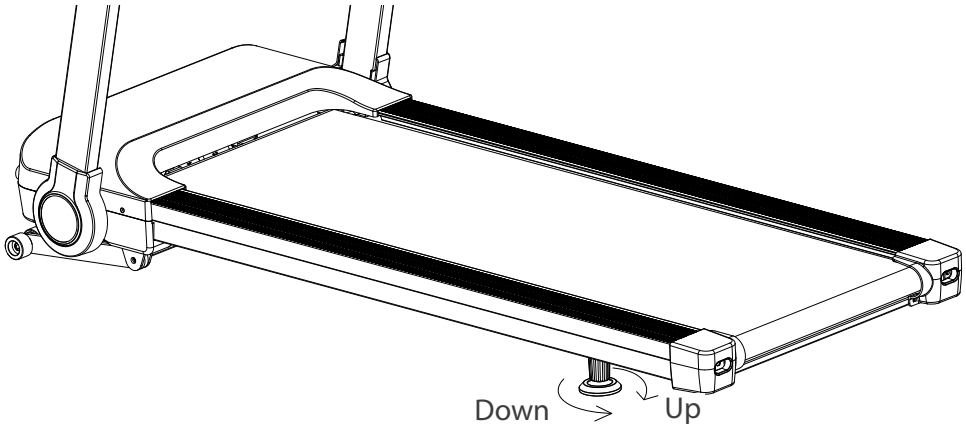

Step 8: Connecting the equipment to the mains supply

► **ATTENTION**
The equipment must not be connected to a multiple socket, otherwise it cannot be guaranteed that the equipment will be supplied with sufficient power. Technical errors can result.

Plug the power plug (E16) into a wall outlet that complies with the instructions in the chapter on electrical safety.

Correctly Getting On and Off

1. To step onto the treadmill, grip the handrails with both hands and step onto the treadmill one foot at a time.
2. To get off, grip the handrails with both hands and step off the treadmill one foot at a time.

2.4 Folding Mechanism

WARNING

+ Do not lift the treadmill by the running mat or the rear transporting wheels. These parts do not lock and are difficult to grab.
+ Do not connect the equipment to the power supply when it is folded up. Try not to operate the equipment when it is folded up.
+ The running surface must have come to a complete stop before folding.

ATTENTION

+ Make sure that nothing is standing next to or on top of the treadmill that can be spilled or thrown or that makes it impossible to fold or unfold the treadmill.

NOTICE

The treadmill is foldable and thus saves space when it is stored. It also makes it easier to transport.

1

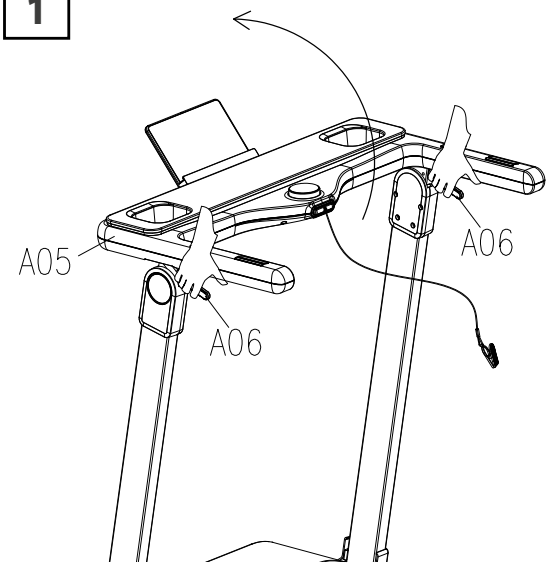

2

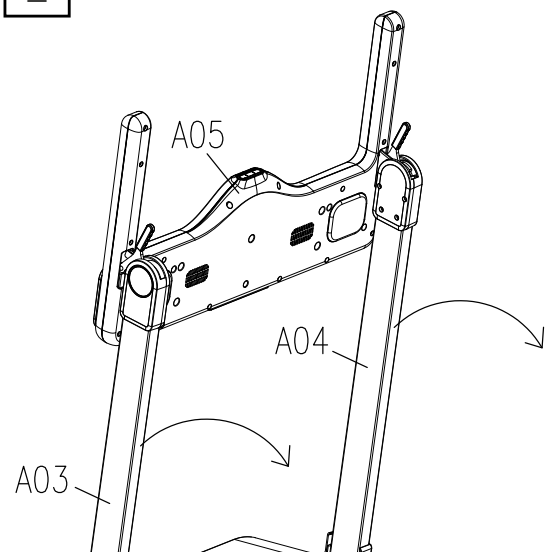

3

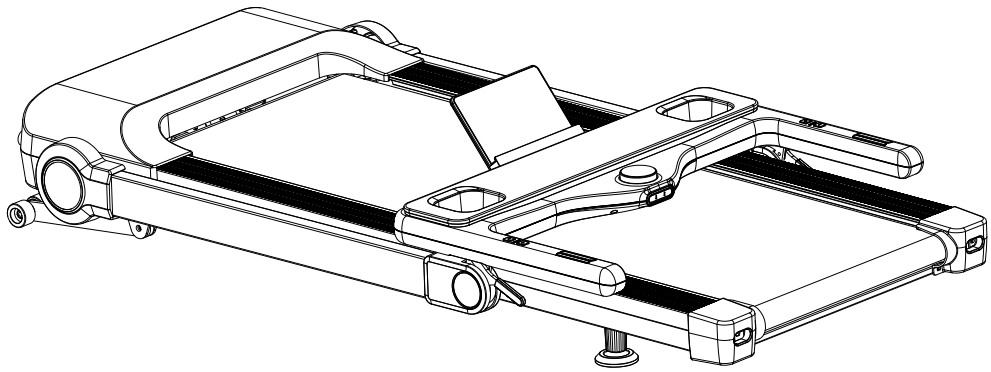

3 OPERATING INSTRUCTIONS

NOTICE

+ Familiarise yourself with all the functions and setting options of the device before starting training. Have the proper use of this product explained to you by a specialist.
+ Always start your training with low intensity and increase evenly and gently. End your training with a cool-down phase. If you are unsure, please consult your physician.
+ Most new treadmills make a knocking noise caused by the running mat sliding over the rollers. The time it takes for the noise to subside depends on the intensity of use, the temperature and the humidity around the treadmill.
+ Please bear in mind that the noise emission under load is higher than without load.

SAFETY KEY

WARNING

+ For your safety, the device is equipped with an EMERGENCY STOP function. The equipment can only be operated if the safety key is correctly attached to the contact point of the cockpit. If the safety key is no longer on the contact point, the equipment automatically stops. Therefore, the Safety Key cord with the clip must be attached to your clothing before every training session. If you want to quickly stop the treadmill, if you can no longer control the speed, or if another emergency occurs, remove the safety key from the cockpit using the cord.
+ To enable the safety key to detach from the contact point of the cockpit in the event of a fall, the safety key clip must be firmly attached to your clothing!
+ Make sure that the safety key is not accessible to children.

3.1 Console Display

Calories	Indicates the burned calories.
Pulse	Indicates your current heart rate.
Time	Indicates the training time.
Speed	Indicates the current speed.
Distance	Indicates the distance.
Incline	Indicates the current incline.

3.2 Button Functions

Rotary knob	The rotary knob is used for several commands and inputs: + Turn the rotary knob clockwise or anti-clockwise to set the corresponding parameters for the programmes (clockwise: increase values; anti-clockwise: decrease values). + Press the rotary knob to start the programme. + Press the rotary knob during training to pause the programme. + In pause mode, briefly press the rotary knob to return to the programme. + In pause mode, press and hold the rotary knob for approx. 3 seconds to end the programme and reset all data. ⓘ **NOTICE** The rotary knob cannot be used to adjust the incline.
MODE	+ Use this button to enter the countdown mode: H1 (time), H2 (distance), H3 (calories).
SPEED +/-	+ Use these buttons to adjust the instant speed.
INCLINE +/-	+ Use these buttons to adjust the instant incline.
PROG	+ Use this button to enter the preset programme mode.

3.3 Fitness Programmes

⚠ **WARNING**
Your training equipment is not a medical device. The heart rate measurement of this equipment may be inaccurate. Various factors can affect the accuracy of the heart rate measurement. The heart rate measurement serves only as a training aid.

In the main menu, you can choose from many different programmes. This includes user-defined programmes, preset programmes and a body fat test.

3.3.1 Quickt Start

When in the main menu, press the rotary knob to start a training session via quick start.

3.3.2 Preset Programme Mode

There are 15 preset programmes from which you can choose.

1. Press PROG to choose the preset programme mode from the main menu and press the rotary knob to confirm.
2. Press PROG to choose from one of the 15 programmes and press the rotary knob to confirm.
3. Use the rotary knob to set a desired training time and press the rotary knob to confirm.
4. Use the rotary knob to start, pause and/or end the programme.

Incline and speed can be adjusted during your training using the incline +/- buttons and the rotary knob.

Upon completion of the programme, the treadmill will start to decelerate automatically until it comes to a halt.

3.3.3 Programme Overview

PROG	TIME	TIME INTERVAL= setting time/10									
		1	2	3	4	5	6	7	8	9	10
P1	SPEED	3	3	5	5	7	7	5	5	3	3
	INCLINE	1	1	2	2	2	3	3	2	1	1
P2	SPEED	10	3	5	7	3	7	5	7	5	3
	INCLINE	1	2	2	2	2	3	3	2	3	3
P3	SPEED	3	3	5	7	7	9	7	5	5	1
	INCLINE	2	3	3	2	2	3	3	3	4	4
P4	SPEED	3	5	3	7	1	5	7	5	3	1
	INCLINE	2	3	3	2	2	3	3	3	4	0
P5	SPEED	5	5	5	7	9	11	9	7	7	5
	INCLINE	3	3	3	4	4	5	5	5	5	2
P6	SPEED	3	5	9	11	7	12	9	11	5	3
	INCLINE	3	5	5	5	4	4	4	3	4	2
P7	SPEED	3	7	9	11	9	9	9	7	5	5
	INCLINE	4	4	4	4	3	3	6	6	8	3
P8	SPEED	5	5	9	9	11	5	11	11	5	3
	INCLINE	4	5	5	5	6	6	6	7	10	3
P9	SPEED	2	5	5	8	8	4	6	3	3	2
	INCLINE	5	5	5	6	6	6	4	4	8	2
P10	SPEED	2	3	4	6	7	5	5	6	7	3
	INCLINE	5	6	6	6	7	5	8	8	5	3
P11	SPEED	3	4	5	9	5	9	5	5	6	3
	INCLINE	3	6	5	3	5	3	5	5	4	2
P12	SPEED	1	2	3	10	7	7	10	5	4	3
	INCLINE	2	5	5	3	5	5	3	3	6	2
P13	SPEED	1	1	3	5	5	5	9	3	1	1
	INCLINE	5	5	8	8	8	3	3	7	8	0
P14	SPEED	3	4	7	3	4	6	3	4	5	3
	INCLINE	2	4	4	4	4	2	3	3	1	0
P15	SPEED	2	3	5	5	7	7	7	6	4	3
	INCLINE	3	3	5	5	5	5	2	2	1	0

3.3.4 User Programme Mode

There are 3 available user programmes for you to adjust to your personal preferences.

1. Press PROG to choose the user programme mode from the main menu and press the rotary knob to confirm.
2. Press PROG to choose from one of the 3 user programmes and press the rotary knob to confirm.
3. Use the rotary knob to set a desired training time and press the rotary knob to confirm.
4. Adjust the speed and incline using the rotary knob and Speed +/- or Incline +/-.

ⓘ **NOTICE**
Only one segment can be adjusted at a time (each programme has 10 adjustable segments).

5. Use the rotary knob to start, pause and/or end the programme.

Incline and speed can be adjusted during your training using the incline and/or Speed +/- buttons and the rotary knob.

Upon completion of the programme, the treadmill will start to decelerate automatically until it comes to a stop.

3.3.5 Body Fat Test

There is a body fat test available. It provides you with information regarding your weight status.

1. Press PROG to choose the body fat test from the main menu and press MODE to confirm.
2. Use the rotary knob to set your personal data (F1-F4) and press MODE to confirm.
3. Press MODE one more time and the body fat test will start (F5).
4. Put your hands on the hand pulse sensors.
5. Your respective result will be displayed after 3 seconds.

Overview of possible values, value ranges, and results:

F-1	SEX	01-Male	02-Female
F-2	AGE	10-99	
F-3	HEIGHT	100-220 cm	
F-4	WEIGHT	20-150 kg	
F-5	FAT	≤18	Thin
	FAT	=(19-24)	Normal
	FAT	=(25-28)	Overweight
	FAT	≥29	Obesity

3.3.6 Heart Rate Controlled Programmes

⚠ **WARNING**
Your training equipment is not a medical device. The heart rate measurement of this equipment may be inaccurate. Various factors can affect the accuracy of the heart rate measurement. The heart rate measurement serves only as a training aid.

ⓘ **NOTICE**
Wear a chest strap for the heart rate controlled programmes. The chest strap must be tightly attached to the chest and skin.

In Standby

1. Press on PROG until HP1 and HP2 appear on the display.
2. Choose a programme.

ⓘ **NOTICE**
+ The maximum speed of HP1 is 10 km/h.
+ The maximum speed of HP2 is 12 km/h.

3. To enter your age, press MODE.

ⓘ **NOTICE**
The default age on the display is 30 (AG:30).

4. To enter your age, press on SPEED +/- or INCLINE +/-.

ⓘ **NOTICE**
The device recommends you a heart rate suited for your entered age.

5. To enter your heart rate, press on MODE.
6. To adjust your desired heart rate, press on SPEED +/- or INCLINE +/-.
7. Once the programme starts, you can adjust the speed and incline with SPEED +/- or INCLINE +/-.

The training begins. The first minute is the warm-up phase.

ⓘ **NOTICE**
During the first minute the device does not automatically adjust the speed to your current heart rate.

8. To adjust the speed during the first minute, press on SPEED +/-.

ⓘ **NOTICE**
+ After one minute the device automatically adjusts the speed to your current heart rate.
+ If your heart rate does not match the set heart rate during training, the speed remains constant while the incline automatically adjusts to the set heart rate.
+ The automatic incline ensures that you reach your set heart rate.

Low heart rate
If the current heart rate does not match the set heart rate, the speed will be automatically increased in 0.5 increments. As soon as the maximum programme speed is reached and the heart rate is still lower, the incline will be automatically increased in increments of 1. The aim is to reach the set heart rate.

High heart rate
If the current heart rate does not match the set heart rate, the incline automatically decreases in increments of 1. If the incline is 0 and the set heart rate has not been reached, the speed automatically decreases in 0.5 increments. This is to ensure that the set heart rate is reached. As soon as the set heart rate is reached, the speed and incline will remain constant.

Age	Pulse			Age	Pulse			Age	Pulse		
	Min	Default	Max		Min	Default	Max		Min	Default	Max
15	123	123	195	37	110	110	174	59	97	97	153
16	122	122	194	38	109	109	173	60	96	96	152
17	122	122	193	39	109	109	172	61	95	95	151
18	121	121	192	40	108	108	171	62	95	95	150
19	121	121	191	41	107	107	170	63	94	94	149
20	120	120	190	42	107	107	169	64	94	94	148
21	119	119	189	43	106	106	168	65	93	93	147
22	119	119	188	44	106	106	167	66	92	92	146
23	118	118	187	45	105	105	166	67	92	92	145
24	118	118	186	46	104	104	165	68	91	91	144
25	117	117	185	47	103	103	164	69	91	91	143
26	116	116	184	48	103	103	163	70	90	90	143
27	116	116	183	49	103	103	162	71	89	90	142
28	115	115	182	50	102	102	162	72	89	90	141
29	115	115	181	51	101	101	161	73	88	90	140
30	114	114	181	52	101	101	160	74	88	90	139
31	113	113	180	53	100	100	159	75	87	90	138
32	113	113	179	54	100	100	158	76	86	90	137
33	112	112	178	55	99	99	157	77	86	90	136
34	112	112	177	56	98	98	156	78	85	90	135
35	111	111	176	57	98	98	155	79	85	90	134
36	110	110	175	58	97	97	154	80	84	90	133

3.4 Wireless Connection and Fitness Apps

This console is equipped with a wireless connection interface. Please take note that your mobile device needs to be compatible with the wireless connection interface of the treadmill.

To use training apps you will have to activate the wireless connection function on your mobile device (tablet or smart phone) and start the fitness app. Select your fitness equipment. Please follow the instructions given in the app. You will find the name of your fitness euqipment on a small sticker on the back of the console.

You will find the fitness apps in the app stores of Google or Apple. There you will find the apps “Kinomap” or “Zwift”. Please note that these apps are produced by an external manufacturer. Fitshop does not take any responsibility regarding the availability, functionality or contents of these programmes.

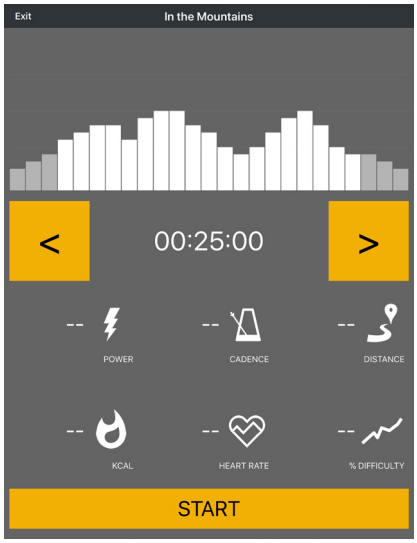

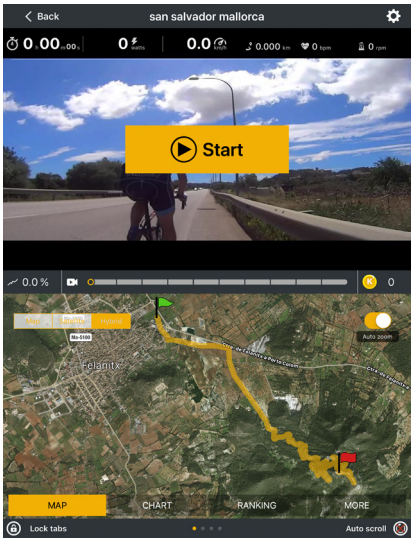

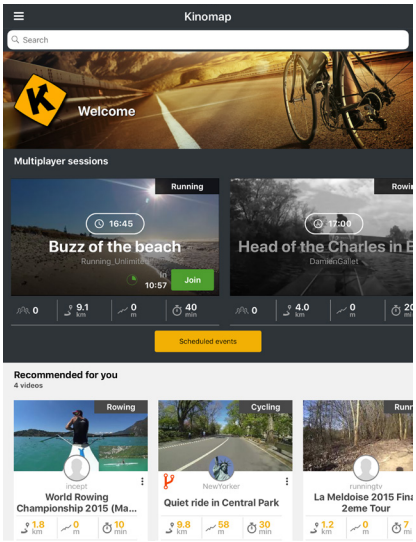

Example: Kinomap

4.1 General Instructions

When training, it is important to perform the exercises correctly in order to avoid injuries and achieve the desired training effect. Make sure you use the correct technique and train at an appropriate intensity level. Always consult an expert such as a trainer or doctor if you are unsure or have health problems. Always start your training with a low load and increase it evenly and gently.
End your training with a cool-down phase. If you have any questions or uncertainties, contact your doctor.

4.1.1 Training clothes

During training, wear appropriate sports clothing that is comfortable and breathable. Avoid clothing that restricts you or is uncomfortable. Make sure that your shoes are suitable and offer you sufficient support. In addition, always carry a towel with you to wipe away sweat and keep the equipment clean.

4.1.2 Warming up and stretching

It is important to warm up and stretch properly before training to avoid injury and improve performance. Stretching helps to loosen muscles and improve flexibility. Be sure to incorporate a short stretching routine before each workout.

Warm-up exercise:

1. Stand upright with your feet about shoulder-width apart.
2. Start with gentle arm circles by slowly moving your arms forwards in small circles in a controlled manner.
3. Perform arm circles backwards to loosen your shoulders and arms.
4. Do squats by slowly squatting down and then straightening up again. Make sure that your knees do not extend beyond your toes.

⚠ **CAUTION**
Do not exercise with sore muscles or take it easy on the affected muscles, as this can lead to injuries.

4.1.3 Medication

If you regularly take medication and want to exercise, it is important to be aware of possible side effects. Ask your doctor whether your medication affects your workout.

4.1.4 Used muscle groups

Rowing uses the following muscle groups:

+ Gluteal muscle
+ Leg muscles

Make sure you keep your back straight during training. Do not hunch over and do not arch your back.

4.1.5 Exercise frequency

Regular exercise is crucial to making progress and staying healthy in the long term. Continuous exercise can strengthen muscles, improve endurance and enhance overall well-being. Remember that even small workouts can be done regularly to achieve long-term results.

Training with heart rate orientation
Heart rate orientation guarantees an extremely effective and healthy training. Through your age and the following table, you can quickly and easily read and determine the optimal pulse for your training. An acoustic alarm will sound if your heart rate exceeds the set target heart rate. Which target heart rate is important for which training goal can be found out in the following.

Fat burning (weight management): The main goal here is to burn deposits of fat. In order to achieve this training goal, a low training intensity (approximately 55% of the maximum heart rate) and a longer training period are required.

Cardiovascular training (cardio training): The primary goal is to increase stamina and fitness through an improved provision of oxygen through the cardiovascular system. In order to achieve this training goal, medium intensity (approximately 75% of the maximum heart rate) with a medium training period is required.

Anaerobic (maximum) load training: The main goal of maximum load training is to improve recovery after short, intense loads in order to be able to quickly return to the aerobic zone. In order to achieve this training goal, a high intensity (approximately 90% of the maximum heart rate) with short, intense load is required, which is followed by a recovery phase in order to prevent muscle fatigue.

Example:
For a 45-year-old man, the maximum heart rate is 175 (220 - 45 = 175).

+ The fat burning target zone (55%) is at approximately 96 beats/min. = (220 - age) x 0.55.
+ The cardio target zone (75%) is at approximately 131 beats/min. = (220 - age) x 0.75.
+ The maximum heart rate for an anaerobic load training (90%) is at approximately 157 beats/min. = (220 - age) x 0.9.

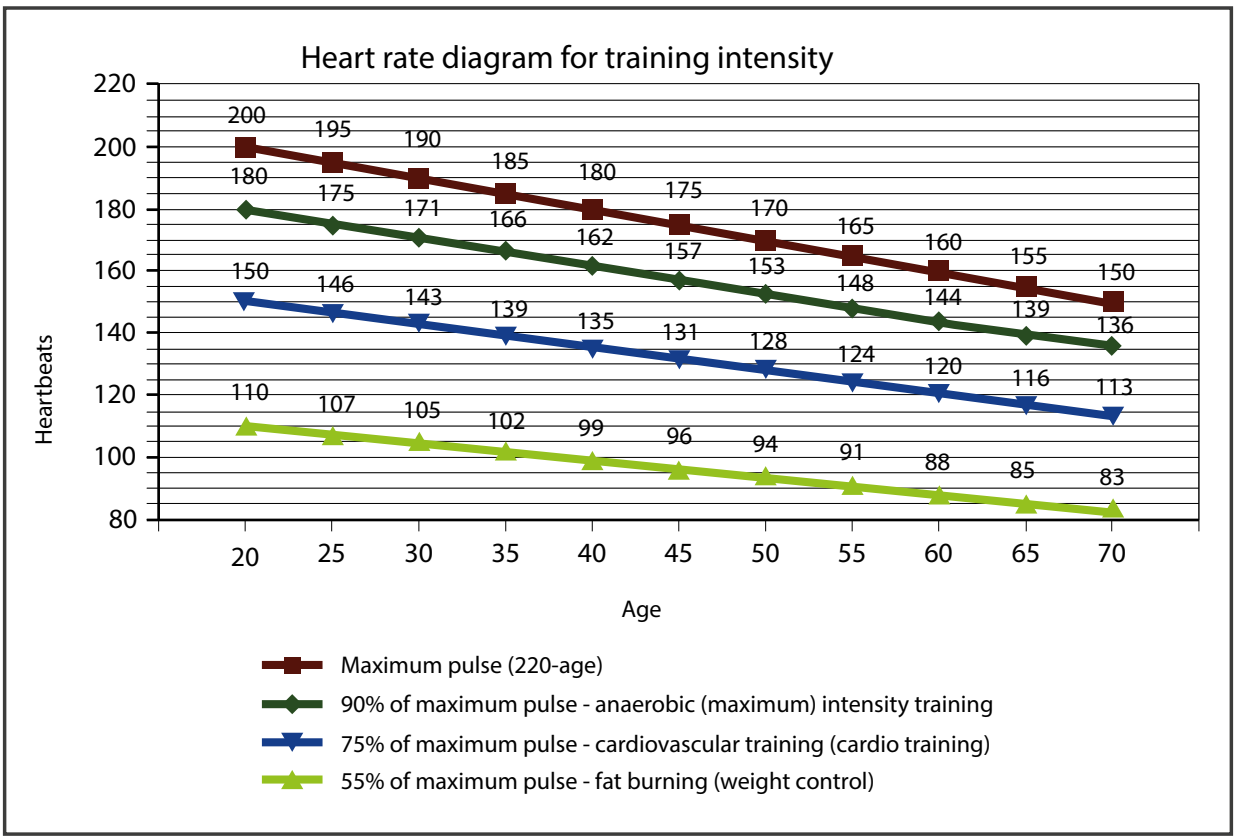

4.2 Workout journal

				kg				

(Copy template)

Date

Distance

Time (min.)

Resistance level

Training weight

Ø Pulse

Calories burnt

I feel ...

Body weight

5.1 General Instructions

⚠ **WARNING**

+ The storage location should be chosen so that improper use by third parties or children can be prevented.
+ If your equipment does not have transportation wheels, the equipment must be disassembled before transportation.

► **ATTENTION**

+ Make sure that the equipment is protected from moisture, dust and dirt in the selected storage location. The storage location should be dry and well ventilated and have a constant ambient temperature between 10°C and 35°C.

5.2 Transportation Wheels

► **ATTENTION**

If you want to transport your equipment over particularly sensitive and soft floor coverings, such as parquet, planks or laminate, lay out the transport route with cardboard or similar to avoid possible floor damage.

1. Stand behind the equipment and lift it until the weight is transferred to the transportation wheels. After that, you easily can move the equipment to a new position. For long transport distances the equipment should be disassembled and safely packed.
2. Select the new location by following the instructions in the section 1.4 of this manual.

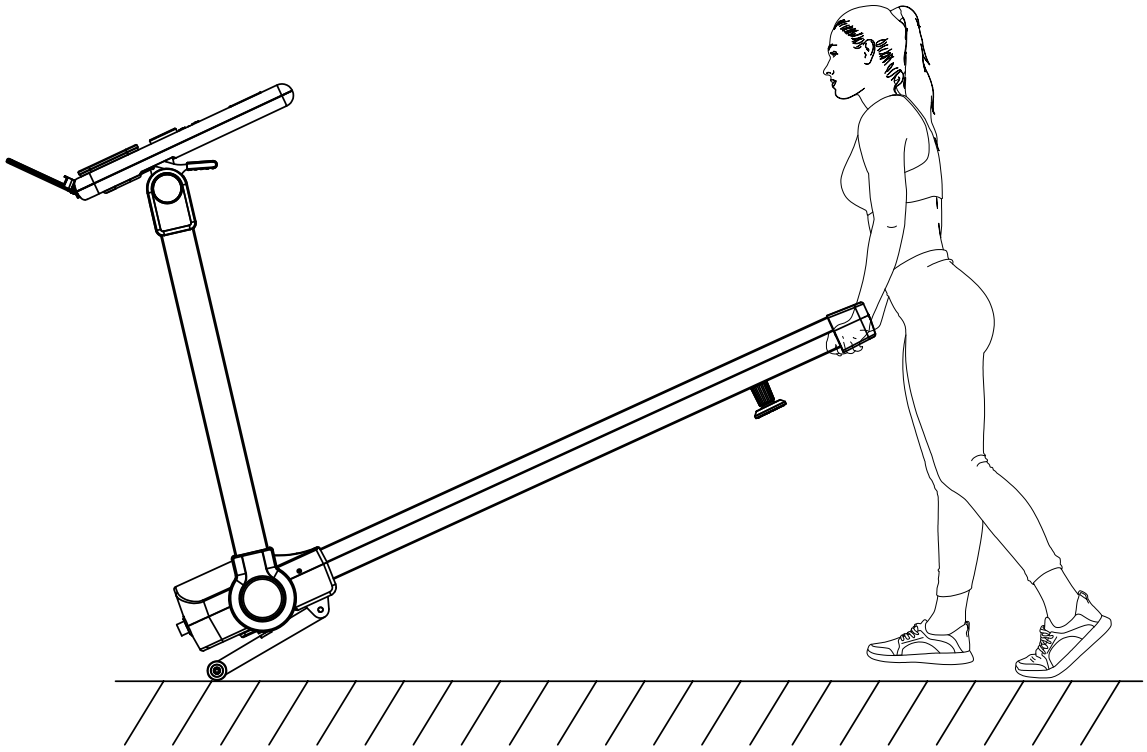

6.1 General Instructions

⚠ **WARNING**

+ Do not make any improper changes to the equipment.

⚠ **CAUTION**

+ Damaged or worn components may affect your safety and the life of the equipment. Therefore, immediately replace damaged or worn components. In such a case, contact the contract partner. The equipment must not be used until it has been repaired. If necessary, use only original spare parts.

► **ATTENTION**

+ In addition to the instructions and recommendations for maintenance and care given here, additional service and/or repair work may be necessary; this must only be carried out by authorised service technicians.

6.2 Faults and Fault Diagnosis

The equipment undergoes regular quality controls during production. Nevertheless, faults or malfunctions may occur. Frequently, individual parts are responsible for these disturbances, an exchange is usually sufficient. Please refer to the following overview for the most common errors and how to correct them. If the equipment still does not function properly, contact your contract partner.

Fault	Cause	Solution
Console is not responding	Safety key missing or not inserted correctly	Check whether Safety Key is inserted and insert if necessary
Running mat slanting Grinding noises	Running mat not centered	Adjust the running mat according to the instructions
Running mat slips through/stops	Tape tension/lubrication not correct	Check belt tension/lubrication according to instructions
Display is blank/is not working	+ Interrupted power connection + Loose cabel connections	+ Power switch to on + Check whether Safety Key is plugged in + Check cable connections
No pulse display	+ Sources of interference in the room + unsuitable chest strap + Wrong position of chest strap + Chest strap defective or battery empty + Pulse display defective	+ Eliminate sources of interference (e.g. mobile phone, WLAN, lawn mower and vacuum cleaner robot, etc. ...) + Use a suitable chest strap (see RECOMMENDED ACCESSORIES). + Reposition chest strap and/or moisten electrodes + Changing batteries + Check if pulse display by hand pulse possible

6.3 Error Codes and Troubleshooting

The electronics of the equipment continuously carries out tests. In case of deviations, an error code appears on the display and normal operation is stopped for your safety.

E01 - Restart the device
E02 - Restart the device
E03 - Switch off the device for 30 minutes and restart it.
E07 - Restart the device.
OIL – The equipment needs to be oiled. Press and hold the rotary knob for 3 seconds to reset the indicator.

Please contact the contract partner for technical support.

6.4 Care and Maintenance

The most important maintenance measure is the care of the running mat. This includes adjustment, re tensioning and lubrication of the running mat. Damage resulting from insufficient or neglected care is not covered by the warranty. You should therefore carry out maintenance checks at regular intervals. Be very careful when adjusting and tightening the running mat, as a strong over voltage or under voltage can cause damage to the equipment. The running mat is adjusted at the factory according to the regulations before delivery. However, it may happen that the running mat slips during transport.

By scanning the QR-code with the camera function or QR-code scanner app of your smartphone/tablet, a video on general maintenance of a treadmill opens on YouTube. The video serves to illustrate the maintenance points described in this manual.

Please note that the video may not be available in your language or with appropriate subtitles.

If you cannot scan QR-codes, you can access all Fitshop videos on YouTube by first opening YouTube and entering "Fitshop" in the search field.

6.4.1 Adjusting the Running Mat

During training, the running mat should run as centrally and straight as possible. The alignment of the running mat can change depending on the stress and load. Another reason can be the positioning of the equipment on an uneven surface.

⚠ **CAUTION**
During the following maintenance nobody must be on the treadmill!

1. Let the treadmill run at a speed of 5 km/h.
2. If the running mat deviates to the left, turn the left adjusting screw at the rear end of the device max. one ¼ turn clockwise and the right adjusting screw max. one ¼ turn anticlockwise.
3. If the running mat deviates to the right, turn the right adjusting screw at the rear end of the device max. ¼ turn clockwise and the left adjusting screw max. ¼ turn anticlockwise.
4. Then observe the mat for about 30 seconds, as the change is not immediately visible.
5. Repeat this procedure until the running mat is straight again. If the running mat cannot be adjusted, please contact your contract partner.

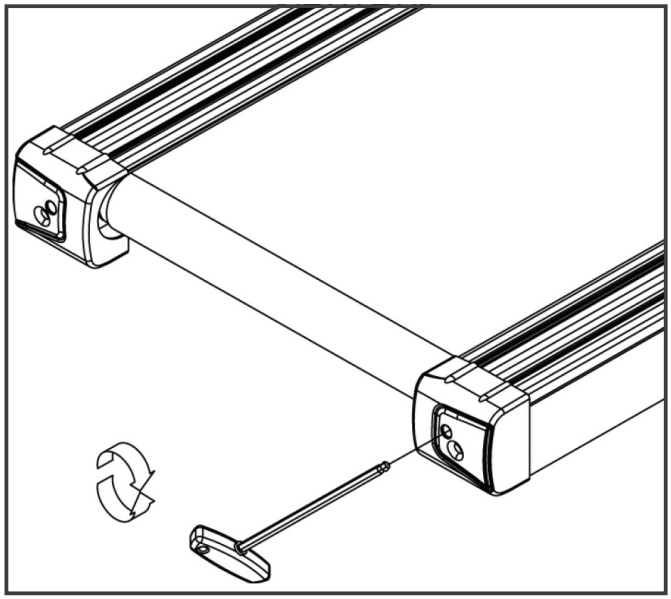

6.4.2 Re-tensioning the Running Mat

If the running mat slips over the rollers during operation (if this is the case, there is a noticeable jerk during running), the running mat must be re tightened.

In most cases, the slipping is caused by stretching of the mat through use. This is perfectly normal.

ⓘ **NOTICE**
Re-tensioning is carried out using the same adjusting screws that are used for adjustment.

1. Let the treadmill run at a speed of 5km/h.
2. Turn the left and right adjusting screws directly one after the other, max. one ¼ turn clockwise.
3. Then check whether the running mat continues to slip. If this is the case, you must perform the described procedure again.

6.4.3 Lubricating the Running Mat

If the running mat is not sufficiently lubricated, friction increases significantly and this leads to heavy wear of the endless belt, running plate, motor and circuit board. If you feel an increased friction of the running mat, this is an indication that you should lubricate the mat. However, lubrication should be carried out at least every 3 months or every 50 operating hours. Whichever case comes first.

ⓘ **NOTICE**
If your treadmill is equipped with a folding mechanism, you can also lubricate it when it is folded.

1. Raise the running mat slightly.
2. Apply some silicone oil or silicone spray to the entire deck and distribute evenly.
3. Continue turning the belt by hand so that the entire surface between the endless belt and the running plate is lubricated.
4. Wipe off the excess silicone oil or silicone spray.

ⓘ **NOTICE**
This maintenance must also be carried out after prolonged non-use of the equipment.

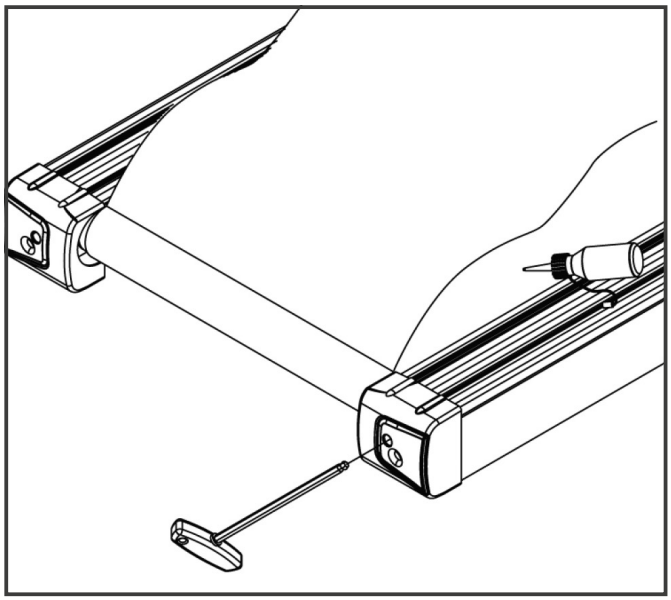

6.5 Maintenance and Inspection Calendar

To avoid damage from body sweat, the equipment must be cleaned with a damp towel (no solvents!) after each training session.

The following routine tasks must be performed at the specified intervals:

Part	Weekly	Monthly	Quarterly
Display console	C	I	
Tension of the running mat			I
Lubrication of the running mat			I
Plastic covers	C	I	
Screws and cable connections			I
Legend: C = clean; I = inspect			

By scanning the QR-code with the camera function or QR-code scanner app of your smartphone/tablet, a video on general maintenance of a treadmill opens on YouTube. The video serves to illustrate the maintenance points described in this manual.

Please note that the video may not be available in your language or with appropriate subtitles.

If you cannot scan QR-codes, you can access all Fitshop videos on YouTube by first opening YouTube and entering "Fitshop" in the search field.

7 DISPOSAL

At the end of its operational life, this equipment cannot be disposed of in normal household waste. Instead, it must be disposed of via an electricals recycling centre. Further information can be obtained from your local authority's recycling service.

The materials can be recycled as per their symbols. Through the reuse, recycling of materials or other forms of recovery of old equipment, you make an important contribution to the protection of the environment.

8 RECOMMENDED ACCESSORIES

To make your training experience even more efficient and pleasant, we recommend that you add suiting accessories to your fitness equipment. For treadmills this could for example be a **floor mat**, which makes your fitness equipment stand more securely and also protects the floor from sweat or **silicone spray** to keep moving parts in good shape and lubricate the running mat. Furthermore, there are additional **handrails** available for some treadmills.

If you have purchased a fitness machine with pulse training and want to train your heart rate, we strongly recommend that you use a compatible **chest strap**, as this ensures optimum transmission of the heart rate.

Our range of accessories offers the highest quality and makes training even better. If you would like to find out more about compatible accessories, please go to the detail page of the product in our webshop (the easiest way is to enter the article number in the search field above) and go to the recommended accessories on this page. Of course, you can also contact our customer service: by telephone, e-mail, in one of our branches or via our social media channels. We will be happy to advise you!

floor mat

chest strap

chest strap contact gel

silicone spray

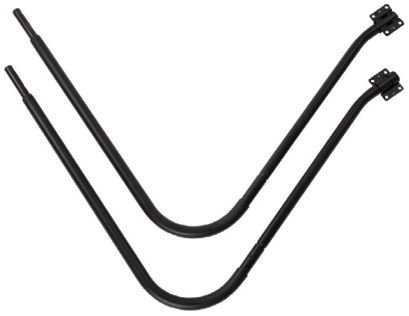

handrails

9.1 Serial Number and Model Name

In order to provide you with the best possible service, please have the model name, article number, serial number, exploded drawing and parts list ready. The corresponding contact options can be found in chapter 10 of this operating manual.

ⓘ **NOTICE**
The serial number of your equipment is unique. It's located on a white sticker.

Enter the serial number in the appropriate field.

Serial number:

Brand / Category:

Darwin / treadmill

Model Name:

Darwin Treadmill TM30

Article Number:

DF-TM30

9.2 Parts List

No.	Name	Specification	Qty.
A01	Lifting Frame Component		1
A02	Main Frame Component		1
A03	Left Column Component		1
A04	Right Column Component		1
A05	Display Basement Component		1
A06	Folding Handlebar		2
A07	Side rail Fixing Panel		6
A08	Motor Fixing Panel		2
A09	Rotating assembly		2
A10	Clearance ring		2
B01	Motor Fixing Base L		1
B02	Motor Fixing Base R		1
B03	Front Roller		1
B04	Back Roller		1
B05	Left Pulse Icon Clip		2
B06	Right Pulse Icon Clip		2
B07	Lifting Frame Sleeve		2
B08	Spring		2
B09	Sleeve		2
B10	Ground Copper Sheet		1
B11	Spring Clip		2
B12	Allen Wrench		1
B13	Column bolt		2
B14	Column bolt spring		2
B15	Steel wire		2
B16	bearing		2
C01	Display Panel		1
C02	Console Top Cover		1
C03	Console Bottom Cover		1
C04	Raster		1
C05	Outside Decorative Cover of Left Column		1

C06	Outside Decorative Cover of Right Column		1
C07	L Decorative Cover of Inner Column		1
C08	Motor Top Cover		1
C09	Motor Bottom Cover		1
C10	Decorative Cover		2
C11	Left Rear End Cap		1
C12	Right Rear End Cap		1
C13	Handlebar Rubber Sleeve		2
C14	Running Belt		1
C15	Side rail		2
C16	Safety Key		1
C17	Cushion		6
C18	Transportation Wheel		4
C19	Cushion		4
C20	Middle Cushion		2
C21	IPAD Top Cover		1
C22	IPAD Bottom Cover		1
C23	IPAD Rubber Cushion		1
C24	IPAD Anti-slip Rubber Cushion		1
C25	IPAD Holder Socket		1
C26	R Decorative Cover of Inner Column		1
C27	Foot Pad Assembly 2		2
C28	Foot Pad Sleeve		2
C29	Soft Foot Pad Sleeve		2
C30	Button		1
C31	Button		1
C32	Button		2
C33	Safety Key Basement		1
C34	Gasket		2
C35	Motor Belt		1
C36	Rubber Pad		4
D01	Nut	M10	2
D02	Nut	M6	7
D03	Nut	M8	2

D04	Nut	M10	4
D05	Bolt	M10*65	1
D06	Bolt	M10*45	1
D07	Bolt	M10*40	2
D08	Bolt	M10*20	2
D09	Bolt	M10*45	2
D10	Bolt	M8*15	4
D11	Bolt	M6*12	6
D12	Bolt	M6*25	6
D13	Bolt	M8*55	2
D14	Bolt	M6*55	1
D15	Bolt	M6*20	2
D16	Bolt	M6*12	13
D17	Screw	ST4.2*12	11
D18	Bolt	M5*10	4
D19	Bolt	M5*8	4
D20	Screw	ST4.2*12	38
D21	Screw	ST4.2*10	5
D22	Screw	ST3.5*10	4
D23	Screw	ST3.5*8	4
D24	Screw	ST2.9*8	10
D25	Screw	ST2.9*8	2
D26	Screw	ST2.9*6	20
D27	Screw	ST2.0*6	4
D28	Screw	ST4.2*19	5
D29	Screw	ST4.2*12	10
D30	Screw	ST2.5*5	6
D31	Flat Washer	Φ10*Φ20*1.5	1
D32	Flat Washer	Φ8	2
D33	Flat Washer	Φ6	6
D34	Flat Washer	φ10*φ26*2	6
D35	Flat Washer	φ8*φ22*2	4
D36	Lock Washer	Φ10	2
D37	Lock Washer	Φ8	2

D38	Lock Washer	Φ6	1
D39	Lock Washer	Φ5	2
D40	Spring Washer	Φ8	4
D41	Bolt	M5*12	2
D42	Screw	ST4.2*16	2
D43	Bolt	M6*60	1
D44	Bolt	M4*16	2
D45	Bolt	M5*10	2
D46	Nut	M6	2
D47	Bolt	M6*20	2
E01	Console		1
E02	Control Board		1
E03	Console Top wire		1
E04	Console Bottom wire		1
E05	Smart Adjustment Knob		1
E06	Knob Connection Wire		1
E07	Safety Key Connection Wire		1
E08	Pulse Top Wire		1
E09	Pulse Bottom Wire		2
E10	Incline Top Wire		1
E11	Incline Bottom Wire		1
E12	Speed Top Wire		1
E13	Speed Bottom Wire		1
E14	Incline Motor		1
E15	Running Board		1
E16	Power Cord		1
E17	Power Switch		1
E18	Power Socket		1
E19	Overload Protector		1
E20	Magnetic Core		1
E21	AC Single Wire		2
E22	AC Single Wire		1
E23	AC Single Wire		1
E24	AC Single Wire		1

E25	Ground Wire		1
E26	Ground Wire		1
E27	Motor		1
F01	Speaker		2
F02	Screw	ST2.9*6	12
F03	USB Module		1
F04	USB Wire		1
F05	Filter	ST4.2*12	1
F06	Inductance		1
F07	AC Single Wire		1
F08	Ground Wire		1
F09	Screw	ST4.2*12	4
F10	B-board		1
F11	Audio socket wire		1
F12	Screw	ST2.5*6	4
F13	B-module		1
F14	B-wire		1
F15	HRC connecting wire		1
F16	Wireless receiver		1

9.3 Exploded Drawing

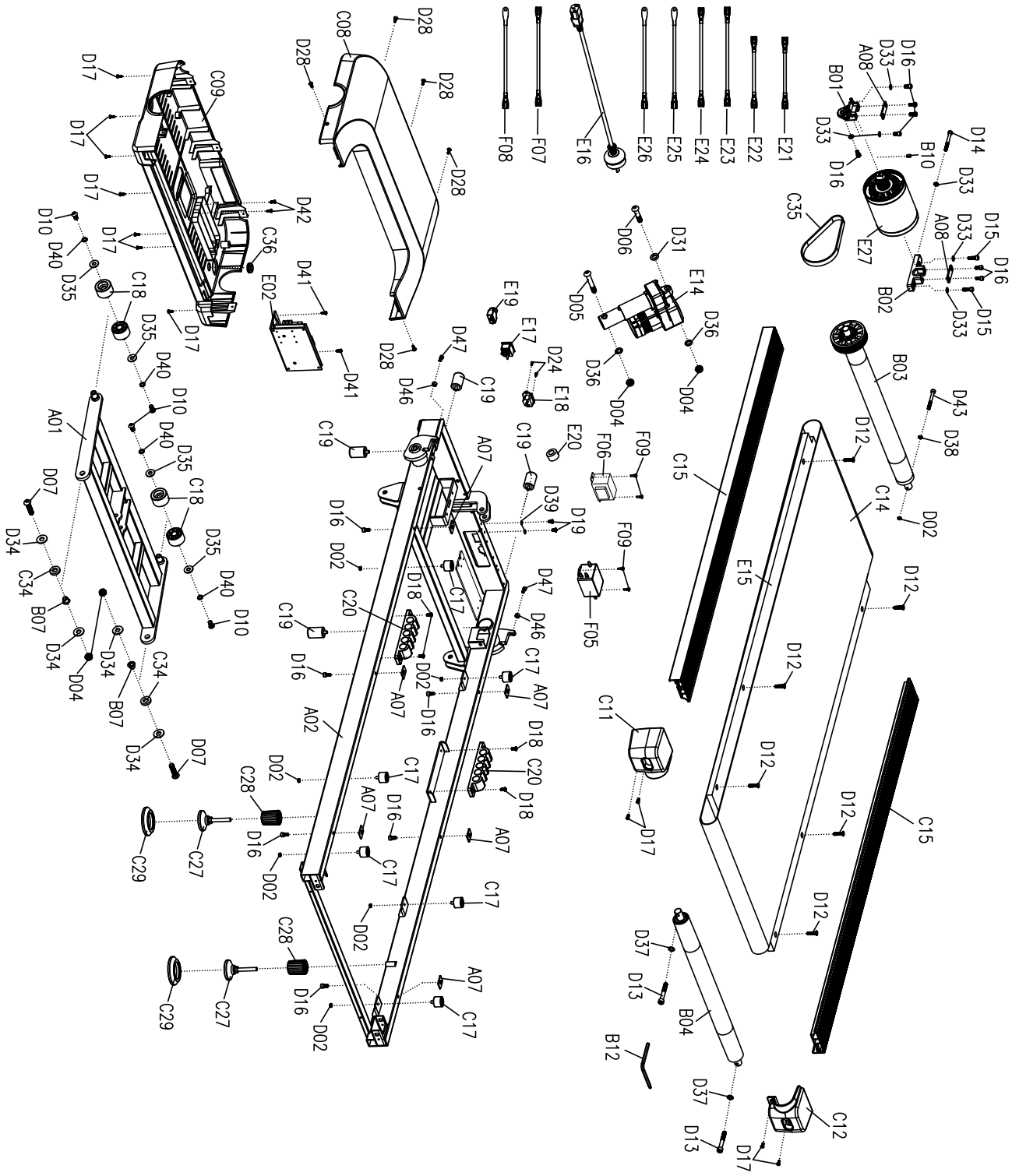

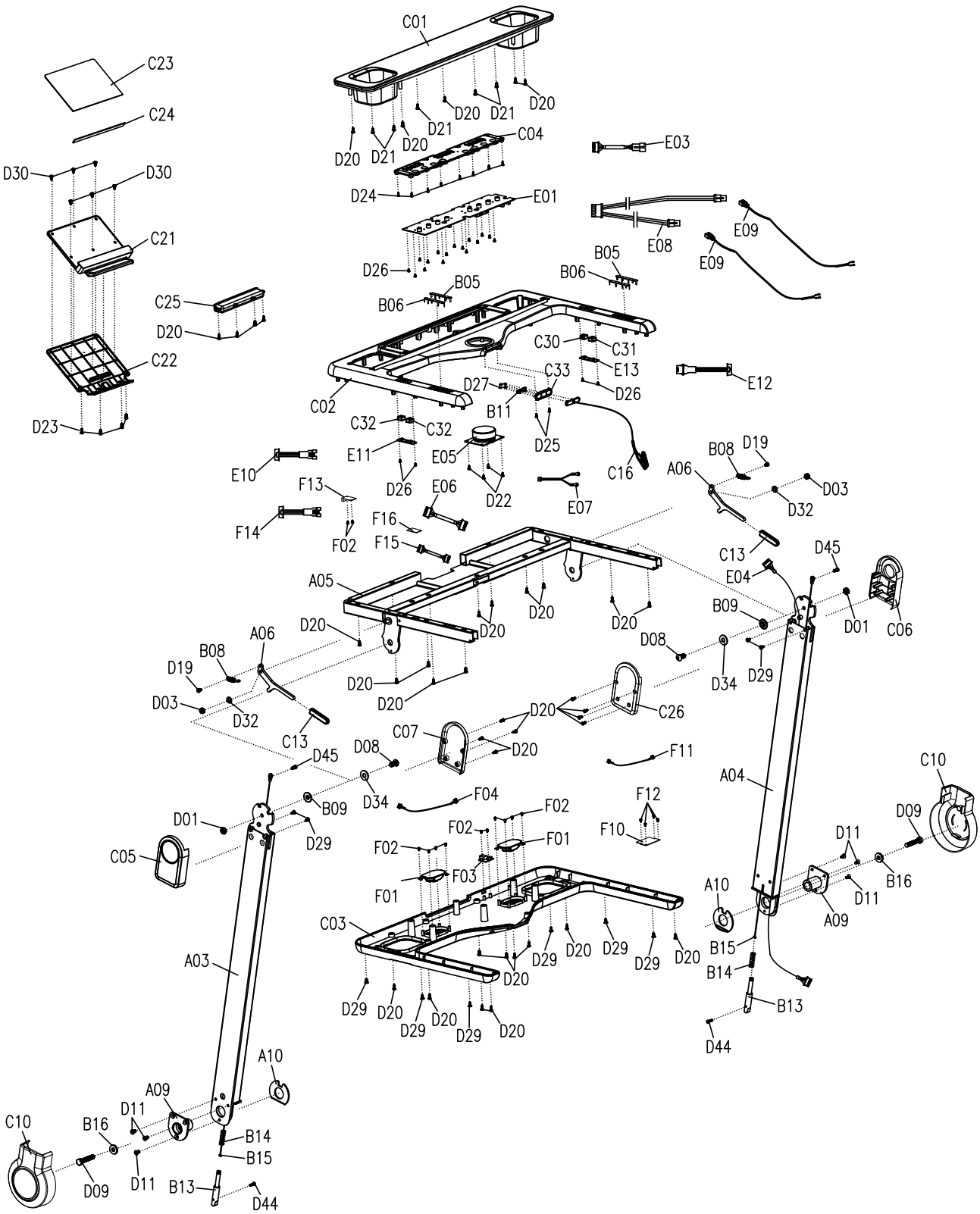
C01
C23
C24
D30
D30
C21
C25
D20
C22
D23
D20
D21
D20
D21
D20
D21
D20
C04
E03
D24
E01
E08
E09
E09
D26
B05
B06
B05
B06
C30
C31
E13
C33
D27
D26
E12
C02
B11
C32
C32
D25
E11
E05
C16
B08
D19
E10
D26
D22
A06
D03
F13
E06
E07
D32
F14
F16
F02
F15
C13
D45
E04
A05
D20
D20
D20
B09
D01
C06
D20
A06
D08
B08
D19
D34
D29
D20
D20
D03
D32
C26
C13
C07
D20
D45
D08
F11
A04
C10
D34
F04
F12
B09
D01
F02
D09
D29
F02
F01
F10
D11
C05
F02
F03
B16
F01
A10
D11
C03
A09
D29
D20
D29
D29
D20
B15
A03
D20
B14
D29
D20
D29
D20
D29
D20
B13
D44
A10
A09
D11
C10
B16
B14
B15
D09
D11
B13
D44

10 WARRANTY

Products from Darwin® are subject to strict quality control. However, if a fitness equipment purchased from us does not work perfectly, we take it very seriously and ask you to contact our customer service as indicated. We are happy to help you by phone via our service hotline.

Error Descriptions
Your fitness equipment is developed for long-term, high-quality training. However, should a problem arise, please first read the operating instructions. For further assistance, please contact your contract partner or call our service hotline. To ensure your problem is solved as quickly as possible, please describe the defect as exactly as possible.

In addition to the statutory warranty, we provide a warranty for every fitness equipment purchased from us according to the following provisions.

Your statutory rights are not affected.

Warrantee
The warrantee is the first/original buyer and/or any person who received a newly purchased product as a gift from the original buyer.

Warranty period
The warranty periods, shown on our web shop, begin on delivery of the fitness equipment. The respective warranty periods for your equipment can be found on its product website.

Repair Costs
According to our choice, there will either be a repair, a replacement of individual damaged parts or a complete replacement. Spare parts, that have to be mounted while assembling the equipment, have to be replaced by the warrantee personally and are not a part of repair. After the expiration of the warranty period, the responsibility for parts costs, repair costs, installation costs and delivery costs lies with the warranty holder.

The terms of use are defined as follows:

+ Home use: solely for private use in private households up to 3 hours per day
+ Semi-professional use: up to 6 hours per day (e. g. rehabilitation centres, hotels, clubs, company gyms)
+ Professional use: more than 6 hours per day (e. g. commercial gyms)

Warranty Service
Within the warranty period, equipment which develops faults as a result of material or manufacturing defects, will be repaired or replaced at our discretion. Ownership of equipment or parts of equipment which have been replaced is transferred to us. The warranty period is not extended nor does a new warranty period begin following repair or replacement under the warranty.

Warranty Conditions
For the warranty to be valid, the following steps must be taken:

Please contact our customer service by email or phone. If the product under warranty has to be sent in for repair, the seller bears costs. After expiry of the warranty, the buyer bears the costs of transport and insurance. If the fault is covered by our warranty, you will receive a new or repaired equipment in return.

Warranty claims are invalid in case of damage resulting from:

+ misuse or improper handling
+ environmental influences (moisture, heat, electrical surge, dust, etc.)
+ failure to follow the current safety measures for the equipment
+ failure to follow the operating instructions
+ use of force (e. g. hitting, kicking, falling)
+ interventions which were not carried out by one of our authorized service centres
+ unauthorised repair attempts

Proof of Purchase and Serial Number
Please make sure that you are able to provide the appropriate receipt when claiming on your warranty. So that we can clearly identify the model of your equipment, and for the purposes of our quality control, you will need to give the serial number of your equipment, when contacting the service team. Where possible please have your serial number and your customer number ready when you call our service hotline. It will help us to deal with your request swiftly.

If you cannot find the serial number on your fitness equipment, our service team is at your disposal to offer further information.

Service outside of the Warranty Period
We are also happy to issue an individual cost estimate if there is a problem with your fitness equipment after the warranty has expired, or in cases which do not fall under the terms of the warranty, e. g. normal wear and tear. Please contact our customer service team to find a quick and cost-effective solution to your problem. In such a case you will be responsible for the delivery costs.

Communication
Many problems can be solved just by speaking to us as your specialist supplier. We know how important it is to you as a user of the fitness equipment to have problems solved quickly and simply, so you can enjoy working out with minimal interruption. For that reason, we also want to resolve your queries quickly and in a straightforward manner. Thus, please always keep your customer number and the serial number of the faulty equipment handy.

11 CONTACT

DE

TECHNIK

+49 4621 4210-900
+49 4621 4210-698
technik@fitshop.de
Öffnungszeiten entnehmen Sie unserer Homepage.

SERVICE

0800 20 20277 (kostenlos)
04621 4210 - 0
info@fitshop.de
Öffnungszeiten entnehmen Sie unserer Homepage: https://stg.fit/statita

DK

TEKNIK OG SERVICE

80 90 16 50
+49 4621 4210-945
info@fitshop.dk
Åbningstider kan findes på hjemmesiden: https://stg.fit/statit7

UK

CUSTOMER SUPPORT

00800 2020 2772
+494621 4210 944
info@fitshop.co.uk
You can find the opening hours on our homepage: https://stg.fit/statitc

FR

TECHNIQUE & SERVICE

+33 (0) 189 530984
+49 4621 42 10 933
info@fitshop.fr
Vous trouverez les heures d'ouverture sur notre site Internet: https://stg.fit/statit4

BE

TECHNIQUE & SERVICE

02 732 46 77
+49 4621 4210 933
info@fitshop.be
Vous trouverez les heures d'ouverture sur notre site Internet: https://stg.fit/statit8

ES

TECNOLOGÍA Y SERVICIOS

911 238 029
info@fitshop.es
Consulta nuestro horario de apertura en la página web: https://stg.fit/statit5

NL

TECHNISCHE DIENST & SERVICE

+31 172 619961
service@fitshop.nl
De openingstijden vindt u op onze homepage: https://stg.fit/statit3

INT

TECHNICAL SUPPORT & SERVICE

+49 4621 4210-944
service-int@fitshop.de
You can find the opening hours on our homepage: https://stg.fit/statita

PL

DZIAŁ TECHNICZNY I SERWIS

22 307 43 21
+49 4621 42 10-948
info@fitshop.pl
Godziny otwarcia można znaleźć na stronie głównej: https://stg.fit/statit6

AT

TECHNIK & SERVICE

0800 20 20277 (Freecall)
+49 4621 42 10-0
info@fitshop.at
Öffnungszeiten entnehmen Sie unserer Homepage: https://stg.fit/statitb

CH

TECHNIK & SERVICE

0800 202 027
+49 4621 42 10-0
info@fitshop.ch
Öffnungszeiten entnehmen Sie unserer Homepage: https://stg.fit/statit9

Please find a detailed overview including address and opening hours for all stores of the Fitshop Group in Germany and abroad on the following website:

www.fitshop.com/en/stores

WE LIVE FITNESS

WEBSHOP AND SOCIAL MEDIA

Fitshop is Europe's largest specialist store for home fitness equipment with currently over 70 stores and one of the world's most renowned online mail order companies for fitness equipment. Private customers order via the 25 web shops in the respective national language or have their desired equipment assembled on site. In addition, the company supplies fitness studios, hotels, sports clubs, companies and physio practices with professional equipment for endurance and strength training.

Fitshop offers a wide range of fitness equipment from renowned manufacturers, high-quality in-house developments and comprehensive services, such as a build-up service and sports scientific advice before and after the purchase. The company employs numerous sports scientists, fitness trainers and competitive athletes.

Visit us also on our social media platforms or our blog!

FIT SHOP www.fitshop.co.uk
www.fitshop.de/blog

www.facebook.com/fitshopgroup

www.instagram.com/fitshopgroup/

www.youtube.com/@fitshop_uk

KETTLER

TAURUS

cardiostrong

BODYCRAFT

cardiojump

DUKEFITNESS

DARWIN

Notes

Notes

DARWIN FITNESS
GERMANY